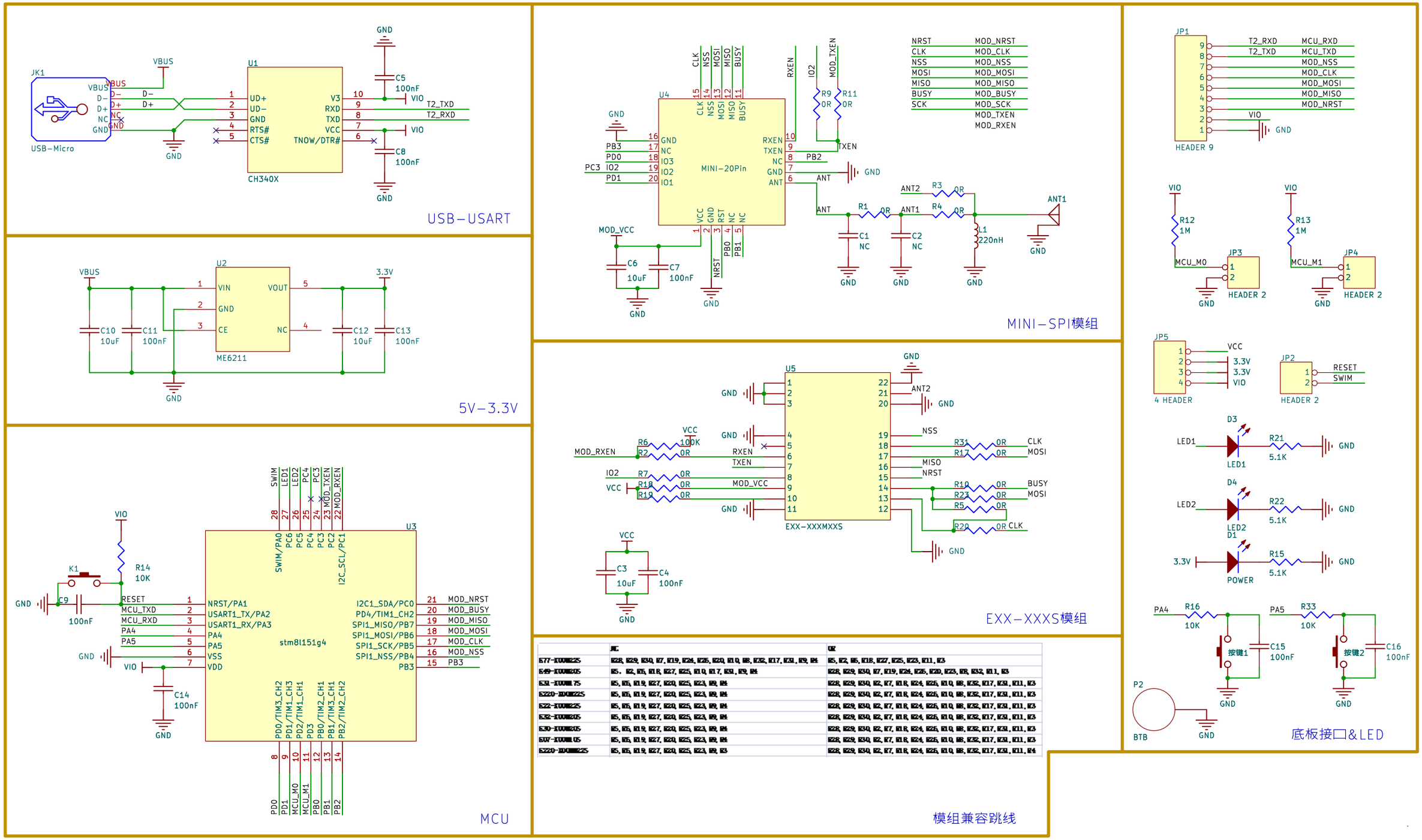
USB-USART
JK1
USB-Micro
VBUS
D-
D+
NC
GND
U1
CH340X
UD+
UD-
RTS#
CTS#
V3
RXD
TXD
VCC
TNOW/DTR#
C5
100nF
C8
100nF
VIO
T2_TXD
T2_RXD
5V-3.3V
U2
ME6211
VIN
VOUT
CE
3.3V
C10
10uF
C11
100nF
C12
10uF
C13
100nF
MINI-SPI模组
U4
MINI-20Pin
CLK
NSS
MOSI
MISO
BUSY
RXEN
TXEN
MOD_TXEN
R9
0R
R11
0R
MOD_VCC
C6
10uF
C7
100nF
NRST
PB0
PB1
PB2
ANT
ANT1
ANT2
R1
R3
R4
C1
NC
C2
NC
L1
220nH
NRST MOD_NRST
CLK MOD_CLK
NSS MOD_NSS
MOSI MOD_MOSI
MISO MOD_MISO
BUSY MOD_BUSY
SCK MOD_SCK
MOD_TXEN
MOD_RXEN
EXX-XXXS模组
U5
EXX-XXXMXXS
MOD_RXEN
R6
100K
R2
0R
R7
R18
R19
R31
R17
R10
R23
R5
R20
C3
10uF
C4
100nF
MCU
U3
stm8l151g4
K1
R14
10K
C9
100nF
C14
100nF
RESET
MCU_TXD
MCU_RXD
PA4
PA5
NRST/PA1
USART1_TX/PA2
USART1_RX/PA3
VSS
VDD
SWIM/PA0
I2C1_SDA/PC0
PD4/TIM1_CH2
SPI1_MISO/PB7
SPI1_MOSI/PB6
SPI1_SCK/PB5
SPI1_NSS/PB4
PB3
MOD_NRST
MOD_BUSY
MOD_MISO
MOD_MOSI
MOD_CLK
MOD_NSS
PD0/TIM3_CH2
PD1/TIM1_CH3
PD2/TIM1_CH1
PD3
PB0/TIM2_CH1
PB1/TIM3_CH1
PB2/TIM2_CH2
模组兼容跳线
底板接口&LED
JP1
HEADER 9
T2_RXD
T2_TXD
MCU_RXD
MCU_TXD
MOD_NSS
MOD_CLK
MOD_MOSI
MOD_MISO
MOD_NRST
R12
1M
R13
1M
MCU_M0
MCU_M1
JP3
JP4
HEADER 2
JP5
4 HEADER
3.3V
JP2
RESET
SWIM
D3
LED1
R21
5.1K
D4
LED2
R22
5.1K
D1
POWER
R15
5.1K
PA4
R16
10K
PA5
R33
10K
按键1
按键2
C15
100nF
C16
100nF
P2
BTB